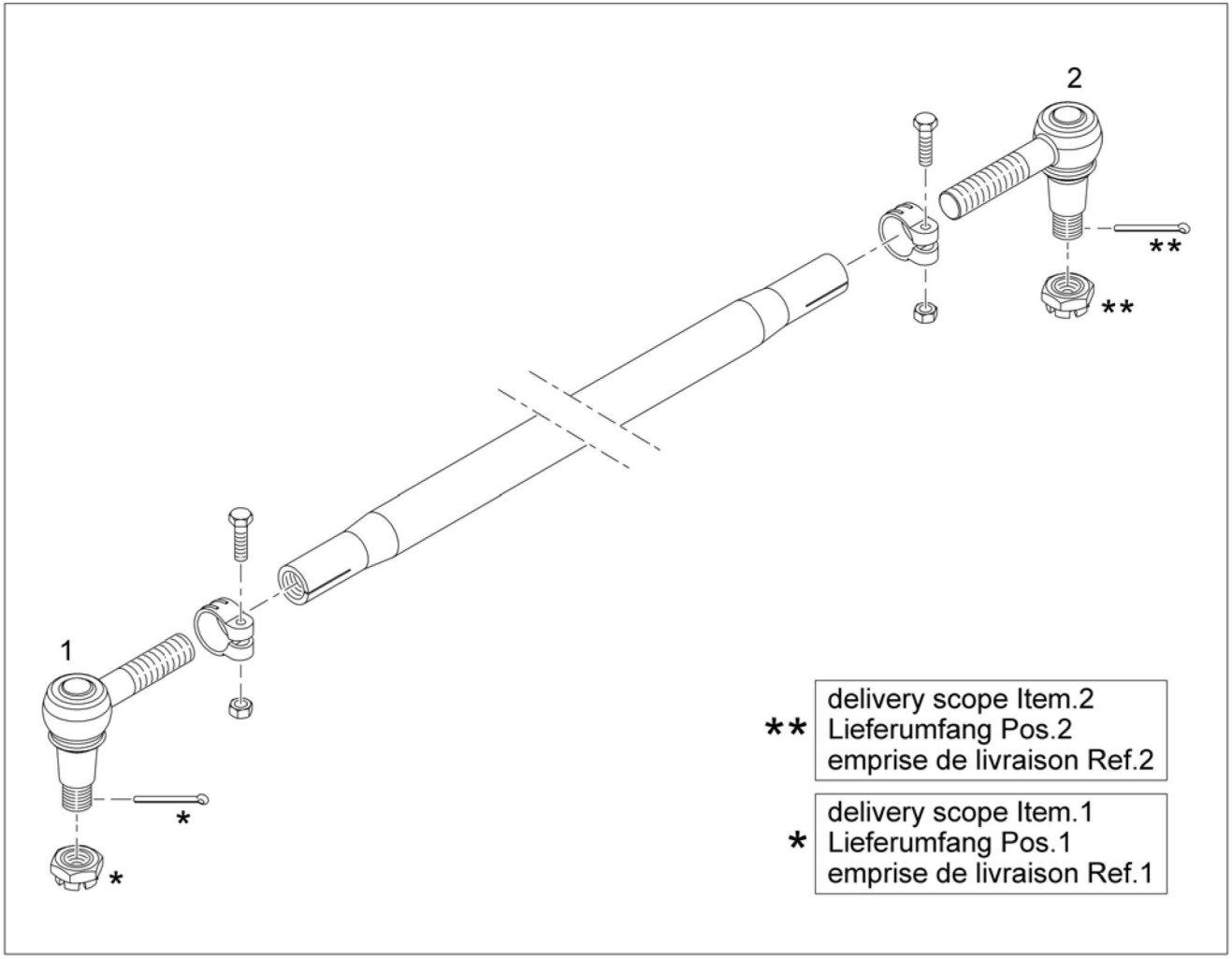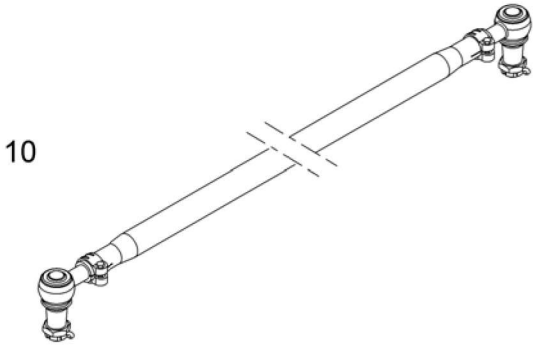STEERING LINK LENKSTANGE BARRE DE DIRECTION	from No / up to No	**Figure** **Bild** **Figure**	TADANO **99707308109**